FLOS

F021A3LA006 Grey

Outgraze 50 L 900 mm Non Dimmable Grey

Designed by FLOS Outdoor, 2019

Integrated 220/240V power supply. Installation brackets, to be ordered separately. Extra clear transparent glass, excluding the DIFFUSE version with sandblasted glass. SMART version available upon request (power 15,5W - flux -30% lm).

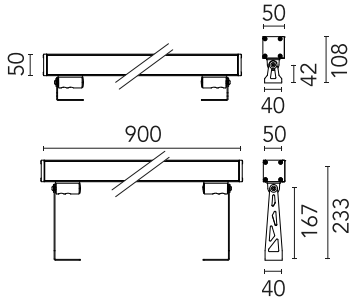

Are you a professional and your project needs consulting and support?

BOOK AN APPOINTMENT

Main specifications

EAN	8054793344195
Mounting	Wall
Environments	Outdoor wet location
Light source type	LED
Light sources included	Yes
LED type	Power LED
Number of lamps	1
Power (W)	20
Lumen Output (lm)	1345

Physical

Colour	Grey
Trim	No
Orientation	Adjustable
Transversal tilting (°)	180
Length (mm)	900
Net weight (kg)	2.47
Package height (mm)	970
Package width (mm)	120
Package length (mm)	120
Package volume (m3)	0.01
IP internal	66

Download

Mounting instructions ZIP

Photometric Files

LDT / IES ZIP

Technical Drawings

2D ZIP

3D ZIP

Bim ZIP

IECEE CB SCHEME | EAC | CE | UKCA | RG 1 IEC 62471 | IP 66 | IK 07

©2022 Flos - P.IVA 00290820174 - 8/31/2025

In our constantly evolving world and business, technical upgrades happen every day. This means all product specifications and data are subject to change without warning in order t improve reliability, function, performance or otherwise. We make every effort to ensure the accuracy of our product images, however due to different lighting and screens used for viewing, the colours may vary. Images are indicative of the quality and style of the product but may not represent the precise details of the product you receive. This is because we are constantly working to make improvements. For aesthetic reasons, cables and/or electrical elements are often not shown. Refer to technical data sheets for all technical data. Images and colours are not part of any contract or warranty in any way.

Schematic light drawing

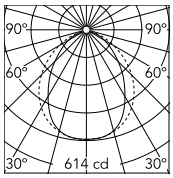

Luminous flux luminaire
1345 lm

Beam Angle: 82°

h(m)	E(lx)	D(m)
1	614	1.74
2	154	3.49
3	68	5.23
4	38	6.98
5	25	8.72

Ecodesign and Energy Labelling

This product contains a light source of energy efficiency class E

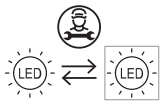

Replaceable (LED only) light source by a professional

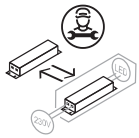

Replaceable control gear by a professional

Photometric

Light distribution	Symmetric
CCT (K)	3000
CRI>	80
Beam angle C0-180 (°)	90
Beam angle C90-270 (°)	90

Electrical

Insulation class	I
Frequency (Hz)	50/60
Main voltage (Vac)	220-240
Power supply	Integrated
Dimmable	No
Dimming interface	Not Dimmable
Emergency	No

Notes

We recommend using a connection system with a degree of protection greater than or equal to the degree of protection of the luminaire.
During the installation and the maintenance of the fixtures it is important to be careful and avoid damages on the paint coating.
Damages on the coating exposed to outdoor conditions or water, could cause corrosion.
Chemical substances affect the anticorrosion covering protection.
For LED fixtures, there is evidence that most of the damages are connected to electrical effects related to the insulations, which cause destructive electrical discharges
These effects are frequently caused by:
• over voltage coming from the mains' network where fixture is connected.
• electrostatic discharge (ESD) coming from the environment.
The use of a protective device against the overvoltage on the electrical installation is warmly suggest this helps to reduce the intensity of some of these phenomenon and prevent irreversible damages. The selection of the type of device to be used must be adjust on the electrical plant.

©2022 Flos - P.IVA 00290820174 - 8/31/2025

In our constantly evolving world and business, technical upgrades happen every day. This means all product specifications and data are subject to change without warning in order t improve reliability, function, performance or otherwise. We make every effort to ensure the accuracy of our product images, however due to different lighting and screens used for viewing, the colours may vary. Images are indicative of the quality and style of the product but may not represent the precise details of the product you receive. This is because we are constantly working to make improvements. For aesthetic reasons, cables and/or electrical elements are often not shown. Refer to technical data sheets for all technical data. Images and colours are not part of any contract or warranty in any way.

Accessories & Power Supply

REQUIRED
Accessory

F1204006

One pair of long bracketss L 200 mm. Grey

REQUIRED
Accessory

F1203006

One pair of short brackets L 80 mm. Grey

REQUIRED
Accessory

F990C00A000

2 way terminal block 4 poles IP68 H20 stop. (ø5,5÷12mm cable)

REQUIRED
Accessory

F021Z010000

Plug&play connector 4 poles

REQUIRED
Accessory

F021Z030000

4-pole plug&play connector + 3-pole cable, 5000 mm length.

REQUIRED
Accessory

F990C010000

3/4 way terminal block 4 poles IP68 H2O stop. (ø5,5÷12mm cable)

©2022 Flos - P.IVA 00290820174 - 8/31/2025

In our constantly evolving world and business, technical upgrades happen every day. This means all product specifications and data are subject to change without warning in order t improve reliability, function, performance or otherwise. We make every effort to ensure the accuracy of our product images, however due to different lighting and screens used for viewing, the colours may vary. Images are indicative of the quality and style of the product but may not represent the precise details of the product you receive. This is because we are constantly working to make improvements. For aesthetic reasons, cables and/or electrical elements are often not shown. Refer to technical data sheets for all technical data. Images and colours are not part of any contract or warranty in any way.