FLOS

F1810033 Argent

Coordinates Wall 1

Designed by Michael Anastassiades, 2020

15W - 961lm - 2700K - CRI> 90

Wall-mounted diffuse lighting device composed of a horizontal bar (model Wall 1) or vertical and horizontal bar (model W2). Each bar is composed of: extruded and processed aluminium body anodized in a champagne or argent colour; diffuser in platinum optical silicone; integrated LED strip (CRI 90). Each model comes with its own rose, whose integrated electronics use only the TRIAC dimmer system.

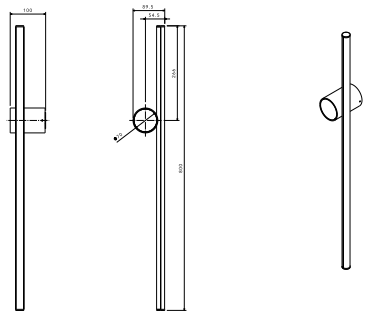

Are you a professional and your project needs consulting and support?

BOOK AN APPOINTMENT

Main specifications

EAN	8059607035245
Mounting	Wall
Environments	Indoor dry location
Light Source Type	LED
LED type	LED Module
Power (W)	15
System power (W)	15
System flux (lm)	961

Physical

Colour	Argent
Length (mm)	100
Net weight (kg)	0.8
Package height (mm)	145
Package width (mm)	290
Package length (mm)	890
Package volume (m3)	0.04
IP internal	20

Download

Mounting instructions	PDF
Compatible dimmers	PDF

Photometric Files

ULD	ZIP
LDT / IES	LDT

Technical Drawings

3D	ZIP
Bim	ZIP

RG 0 IEC 62471

GWT 850°

©2022 Flos - P.IVA 00290820174 - 10/3/2024

In our constantly evolving world and business, technical upgrades happen every day. This means all product specifications and data are subject to change without warning in order t improve reliability, function, performance or otherwise. We make every effort to ensure the accuracy of our product images, however due to different lighting and screens used for viewing, the colours may vary. Images are indicative of the quality and style of the product but may not represent the precise details of the product you receive. This is because we are constantly working to make improvements. For aesthetic reasons, cables and/or electrical elements are often not shown. Refer to technical data sheets for all technical data. Images and colours are not part of any contract or warranty in any way.

Photometric

Light distribution	Asymmetric
CCT (K)	2700
CRI>	90
Extreme cut off	No

Electrical

Insulation class	I
Frequency (Hz)	50/60
Main voltage (Vac)	230
Power Supply	Integrated
Dimmable	Yes
Power Supply Type	Mains Cut Dimming
Dimming interface	Remote Dimmable (Dimmer Not Included)
Batteries inside	No

Ecodesign and Energy Labelling

This product contains a light source of energy efficiency class F

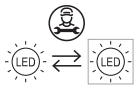

Replaceable (LED only) light source by a professional

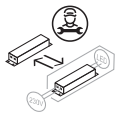

Replaceable control gear by a professional

©2022 Flos - P.IVA 00290820174 - 10/3/2024

In our constantly evolving world and business, technical upgrades happen every day. This means all product specifications and data are subject to change without warning in order t improve reliability, function, performance or otherwise. We make every effort to ensure the accuracy of our product images, however due to different lighting and screens used for viewing, the colours may vary. Images are indicative of the quality and style of the product but may not represent the precise details of the product you receive. This is because we are constantly working to make improvements. For aesthetic reasons, cables and/or electrical elements are often not shown. Refer to technical data sheets for all technical data. Images and colours are not part of any contract or warranty in any way.