FLOS

F0416030 Black

Arrangements Small Rose

Designed by Michael Anastassiades, 2018

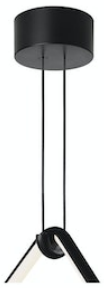

Small Rose-MAX70

Are you a professional and your project needs consulting and support?

BOOK AN APPOINTMENT

Download

Mounting instructions	PDF
Spare Parts	PDF

Main specifications

EAN	8059607001011
Mounting	Suspension
Environments	Indoor dry location
Power (W)	78

Physical

Colour	Black
Cord length (mm)	2400
Net weight (kg)	1.25
Package height (cm)	120
Package width (cm)	240
Package length (cm)	260
Package volume (m3)	0.01
IP internal	20

Ecodesign and Energy Labelling

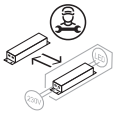

Replaceable control gear by a professional

IP 20

©2022 Flos - P.IVA 00290820174 - 5/20/2023

In our constantly evolving world and business, technical upgrades happen every day. This means all product specifications and data are subject to change without warning in order t improve reliability, function, performance or otherwise. We make every effort to ensure the accuracy of our product images, however due to different lighting and screens used for viewing, the colours may vary. Images are indicative of the quality and style of the product but may not represent the precise details of the product you receive. This is because we are constantly working to make improvements. For aesthetic reasons, cables and/or electrical elements are often not shown. Refer to technical data sheets for all technical data. Images and colours are not part of any contract or warranty in any way.

Electrical

Insulation class	I
Frequency (Hz)	50/60
Main voltage (Vac)	120-277
LED voltage Vf (Vdc)	null
Driver	Integrated
Dimmable	Yes
Dimming type	Dimmable 0-10V, Dimmable Push, Dimmable 1-10V, Dimmable DALI 1
Dimming interface	Remote Dimmable (Dimmer Not Included)
Batteries inside	No

©2022 Flos - P.IVA 00290820174 - 5/20/2023

In our constantly evolving world and business, technical upgrades happen every day. This means all product specifications and data are subject to change without warning in order t improve reliability, function, performance or otherwise. We make every effort to ensure the accuracy of our product images, however due to different lighting and screens used for viewing, the colours may vary. Images are indicative of the quality and style of the product but may not represent the precise details of the product you receive. This is because we are constantly working to make improvements. For aesthetic reasons, cables and/or electrical elements are often not shown. Refer to technical data sheets for all technical data. Images and colours are not part of any contract or warranty in any way.

Spare Parts

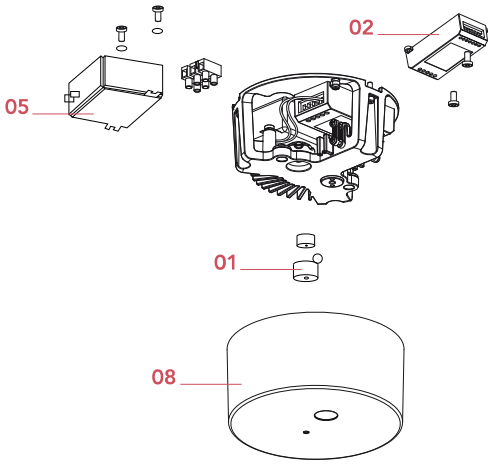

01.	Stretch cable ceiling rose kit	RF0410400
02.	Led dimmer kit	RF0410300
05.	Power supply kit for Arrangements small & Noctambule	RF0410500
08.	Small ceiling rose cover	RF0410700
09.	Spacers cable	RF26602
10.	Regolation cables key	RF26440
11.	Element support assembly	RF26906

DOWNLOAD

©2022 Flos - P.IVA 00290820174 - 5/20/2023

In our constantly evolving world and business, technical upgrades happen every day. This means all product specifications and data are subject to change without warning in order t improve reliability, function, performance or otherwise. We make every effort to ensure the accuracy of our product images, however due to different lighting and screens used for viewing, the colours may vary. Images are indicative of the quality and style of the product but may not represent the precise details of the product you receive. This is because we are constantly working to make improvements. For aesthetic reasons, cables and/or electrical elements are often not shown. Refer to technical data sheets for all technical data. Images and colours are not part of any contract or warranty in any way.

RF0410400

Stretch cable ceiling rose kit

RF0410300

Led dimmer kit

RF0410500

Power supply kit for Arrangements small & Noctambule

RF0410700

Small ceiling rose cover

RF26602

Spacers cable

RF26440

Regolation cables key

RF26906

Element support assembly

©2022 Flos - P.IVA 00290820174 - 5/20/2023

In our constantly evolving world and business, technical upgrades happen every day. This means all product specifications and data are subject to change without warning in order t improve reliability, function, performance or otherwise. We make every effort to ensure the accuracy of our product images, however due to different lighting and screens used for viewing, the colours may vary. Images are indicative of the quality and style of the product but may not represent the precise details of the product you receive. This is because we are constantly working to make improvements. For aesthetic reasons, cables and/or electrical elements are often not shown. Refer to technical data sheets for all technical data. Images and colours are not part of any contract or warranty in any way.