FLOS

FA53907833-310 Anthracite

Dooku 400 Single Top Pole Ø76 mm Symmetric Optic Dimmable 1-10V

Designed by FLOS Outdoor, 2014

LED source included. Integrated power supply 220-240V ON/OFF and dimmable 1-10V or DALI. Fixing bracket included. Equipped with a 400mm protruding neoprene cable section and IP68 connectors. Single socket for 76mm diameter post. The post must be ordered separately. Smart-City version available upon request.

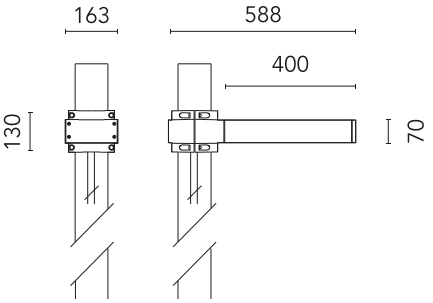

Are you a professional and your project needs consulting and support?

BOOK AN APPOINTMENT

Main specifications

EAN	8054793798325
Mounting	Pole Top
Light source type	LED
Light sources included	Yes
LED type	Power LED
Number of lamps	1
Power (W)	1
System power (W)	39
Source flux (lm)	1
Lumen Output (lm)	1

Physical

Colour	Anthracite
Orientation	Fixed
Net weight (kg)	1.16
Package height (mm)	605
Package width (mm)	175
Package length (mm)	150
Package volume (m3)	0.02
IP internal	65

Download

Mounting instructions ZIP

Photometric Files

LDT / IES ZIP

Technical Drawings

2D ZIP

3D ZIP

RG IEC 62471

IP 65

IK 09

©2026 Flos - P.IVA 00290820174 - 6/1/2026

In our constantly evolving world and business, technical upgrades happen every day. This means all product specifications and data are subject to change without warning in order t improve reliability, function, performance or otherwise. We make every effort to ensure the accuracy of our product images, however due to different lighting and screens used for viewing, the colours may vary. Images are indicative of the quality and style of the product but may not represent the precise details of the product you receive. This is because we are constantly working to make improvements. For aesthetic reasons, cables and/or electrical elements are often not shown. Refer to technical data sheets for all technical data. Images and colours are not part of any contract or warranty in any way.

Schematic light drawing

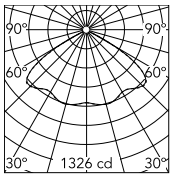

Luminous flux luminaire
3389 lm

Beam Angle: 121°

h(m)	E(lx)	D(m)
1	885	3.54
2	221	7.09
3	98	10.63
4	55	14.18
5	35	17.72

Ecodesign and Energy Labelling

This product contains a light source of energy efficiency class E

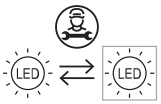

Replaceable (LED only) light source by a professional

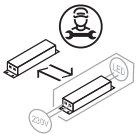

Replaceable control gear by a professional

Photometric

Lighting type	Direct
Light distribution	Symmetric
CCT (K)	2700
CRI>	80
Beam angle C0-180 (°)	120
Beam angle C90-270 (°)	120
Extreme cut off	No

Electrical

Insulation class	I
Frequency (Hz)	50/60
Main voltage (Vac)	220-240
Power supply	Integrated
Power supply type	Dimmable, Dimmable 1-10V
Emergency	No

Notes

Please check with your referent person in our Front Office if a code modification is needed to meet the required certification compliance

©2026 Flos - P.IVA 00290820174 - 6/1/2026

In our constantly evolving world and business, technical upgrades happen every day. This means all product specifications and data are subject to change without warning in order t improve reliability, function, performance or otherwise. We make every effort to ensure the accuracy of our product images, however due to different lighting and screens used for viewing, the colours may vary. Images are indicative of the quality and style of the product but may not represent the precise details of the product you receive. This is because we are constantly working to make improvements. For aesthetic reasons, cables and/or electrical elements are often not shown. Refer to technical data sheets for all technical data. Images and colours are not part of any contract or warranty in any way.

Accessories & Power Supply

REQUIRED
Pole

FA24833

Pole Ø76 mm h 3500 mm(with Base)

REQUIRED
Pole

FA25033

Pole Ø76 mm h 3500 mm (+500 mm In-ground)

REQUIRED
Pole

FA24933

Pole Ø76 mm h 4500 mm(with Base)

REQUIRED
Pole

FA25133

Pole Ø76 mm h 4500 mm (+500 mm In-ground)

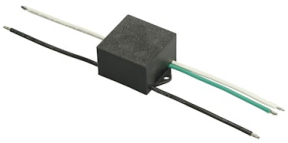

OPTIONAL
Accessory

F990E00A000

S.P.D. (SURGE PROTECTION DEVICE)

OPTIONAL
Accessory

FA116

Base Plate and Fixing Bolts for Pole Ø 102 mm h 4000/5000 mm with Base

©2026 Flos - P.IVA 00290820174 - 6/1/2026

In our constantly evolving world and business, technical upgrades happen every day. This means all product specifications and data are subject to change without warning in order t improve reliability, function, performance or otherwise. We make every effort to ensure the accuracy of our product images, however due to different lighting and screens used for viewing, the colours may vary. Images are indicative of the quality and style of the product but may not represent the precise details of the product you receive. This is because we are constantly working to make improvements. For aesthetic reasons, cables and/or electrical elements are often not shown. Refer to technical data sheets for all technical data. Images and colours are not part of any contract or warranty in any way.