FLOS

F1632035 Rust Red

Céramique Up

Designed by Ronan Bouroullec, 2023

LED retrofit - 8W

The «Céramique» lamp collection was designed by Ronan Bouroullec for Flos. This lamp is the pure expression of a material, a union of the hands of a designer that can create visual poetry and the «savoir-fair» of a company that can translate it into an object. The lamp's iconic ceramic body features a lead- free lacquered crystalline finish that complements its handcrafted surface. White diffuser made of polycarbonate. Céramique combines elegance and craftsmanship with versatile lighting. With a durable design and attention to detail, this collection enhances the beauty of ceramics and promotes energy efficiency. Available colors: Moss Green, Navy Blue and Rust Red.

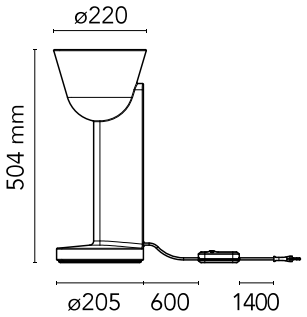

Are you a professional and your project needs consulting and support?

BOOK AN APPOINTMENT

Main specifications

EAN	8059607061817
Mounting	Table
Environments	Indoor dry location
Light source type	Bulb
Light sources included	No
Lamp category	LED retrofit
Lamp type	A60
Lamp holders	E27
Number of lamps	1
Power (W)	8

Physical

Colour	Rust Red
Length (mm)	195
Cord colour	Black
Cord length (mm)	2000
Net weight (kg)	3.5
Package height (mm)	715
Package width (mm)	370
Package length (mm)	370
Package volume (m3)	0.1
IP internal	20

Download

Mounting instructions PDF

Photometric Files

LDT / IES LDT

Technical Drawings

2D ZIP

3D ZIP

©2026 Flos - P.IVA 00290820174 - 2/23/2026

In our constantly evolving world and business, technical upgrades happen every day. This means all product specifications and data are subject to change without warning in order t improve reliability, function, performance or otherwise. We make every effort to ensure the accuracy of our product images, however due to different lighting and screens used for viewing, the colours may vary. Images are indicative of the quality and style of the product but may not represent the precise details of the product you receive. This is because we are constantly working to make improvements. For aesthetic reasons, cables and/or electrical elements are often not shown. Refer to technical data sheets for all technical data. Images and colours are not part of any contract or warranty in any way.

Schematic light drawing

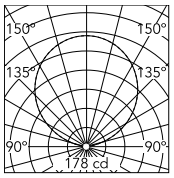

Luminous flux luminaire
974 lm

Beam Angle: 110°

h(m)	E(lx)	D(m)
1	178	2.83
2	44	5.67
3	20	8.50
4	11	11.33
5	7	14.17

Photometric

Light distribution	Symmetric

Electrical

Insulation class	II
Frequency (Hz)	50/60
Main voltage (Vac)	220-240
Dimmable	Yes
Dimming interface	Dimmer Integrated
Plug type	Type C

©2026 Flos - P.IVA 00290820174 - 2/23/2026

In our constantly evolving world and business, technical upgrades happen every day. This means all product specifications and data are subject to change without warning in order t improve reliability, function, performance or otherwise. We make every effort to ensure the accuracy of our product images, however due to different lighting and screens used for viewing, the colours may vary. Images are indicative of the quality and style of the product but may not represent the precise details of the product you receive. This is because we are constantly working to make improvements. For aesthetic reasons, cables and/or electrical elements are often not shown. Refer to technical data sheets for all technical data. Images and colours are not part of any contract or warranty in any way.

Bulbs

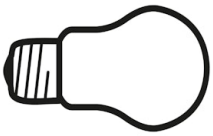

NOT INCLUDED

RF25317

LED Opal Lamp E27 8W 3000K
A60 Dimmable

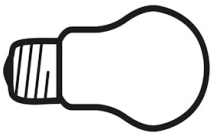

NOT INCLUDED

RF25323

LED Opal Lamp E27 8W 2700K
A60 Dimmable

©2026 Flos - P.IVA 00290820174 - 2/23/2026

In our constantly evolving world and business, technical upgrades happen every day. This means all product specifications and data are subject to change without warning in order t improve reliability, function, performance or otherwise. We make every effort to ensure the accuracy of our product images, however due to different lighting and screens used for viewing, the colours may vary. Images are indicative of the quality and style of the product but may not represent the precise details of the product you receive. This is because we are constantly working to make improvements. For aesthetic reasons, cables and/or electrical elements are often not shown. Refer to technical data sheets for all technical data. Images and colours are not part of any contract or warranty in any way.

Spare Parts

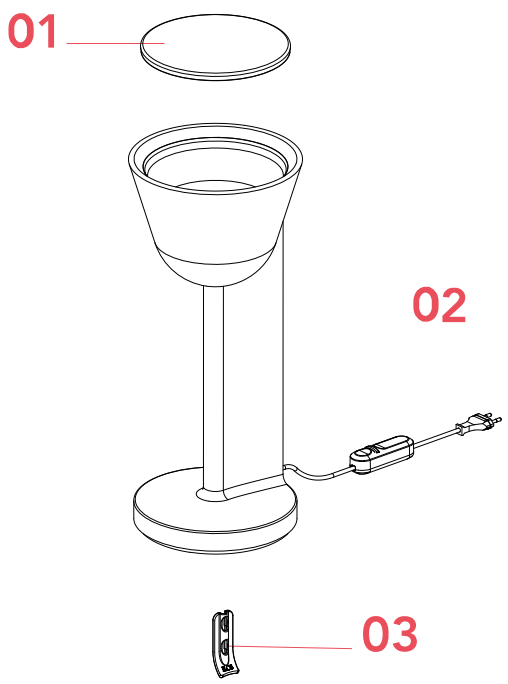

01.	Ceramique Opal White Diffuser	RF35886
02.	Black Dimmer Switch	RF28206
03.	Ceramique EU Diffuser Removal Tool	RF35919

©2026 Flos - P.IVA 00290820174 - 2/23/2026

In our constantly evolving world and business, technical upgrades happen every day. This means all product specifications and data are subject to change without warning in order t improve reliability, function, performance or otherwise. We make every effort to ensure the accuracy of our product images, however due to different lighting and screens used for viewing, the colours may vary. Images are indicative of the quality and style of the product but may not represent the precise details of the product you receive. This is because we are constantly working to make improvements. For aesthetic reasons, cables and/or electrical elements are often not shown. Refer to technical data sheets for all technical data. Images and colours are not part of any contract or warranty in any way.

RF35886

Ceramique Opal White Diffuser

RF28206

Black Dimmer Switch

RF35919

Ceramique EU Diffuser Removal Tool

©2026 Flos - P.IVA 00290820174 - 2/23/2026

In our constantly evolving world and business, technical upgrades happen every day. This means all product specifications and data are subject to change without warning in order t improve reliability, function, performance or otherwise. We make every effort to ensure the accuracy of our product images, however due to different lighting and screens used for viewing, the colours may vary. Images are indicative of the quality and style of the product but may not represent the precise details of the product you receive. This is because we are constantly working to make improvements. For aesthetic reasons, cables and/or electrical elements are often not shown. Refer to technical data sheets for all technical data. Images and colours are not part of any contract or warranty in any way.