**EN**

# RF4640400

Ok Internal lamp body assembly

WARNING! When installing and whenever acting on the appliance, ensure that the power supply has been switched off.
For the installation of the spare-part, it is necessary to consult a qualified electrician.

©2021 Flos - All rights reserved - www.flos.com
Flos reserves the right to introduce any changes to its own models, without prior notice.

**EN**

# RF4640400

Ok Internal lamp body assembly

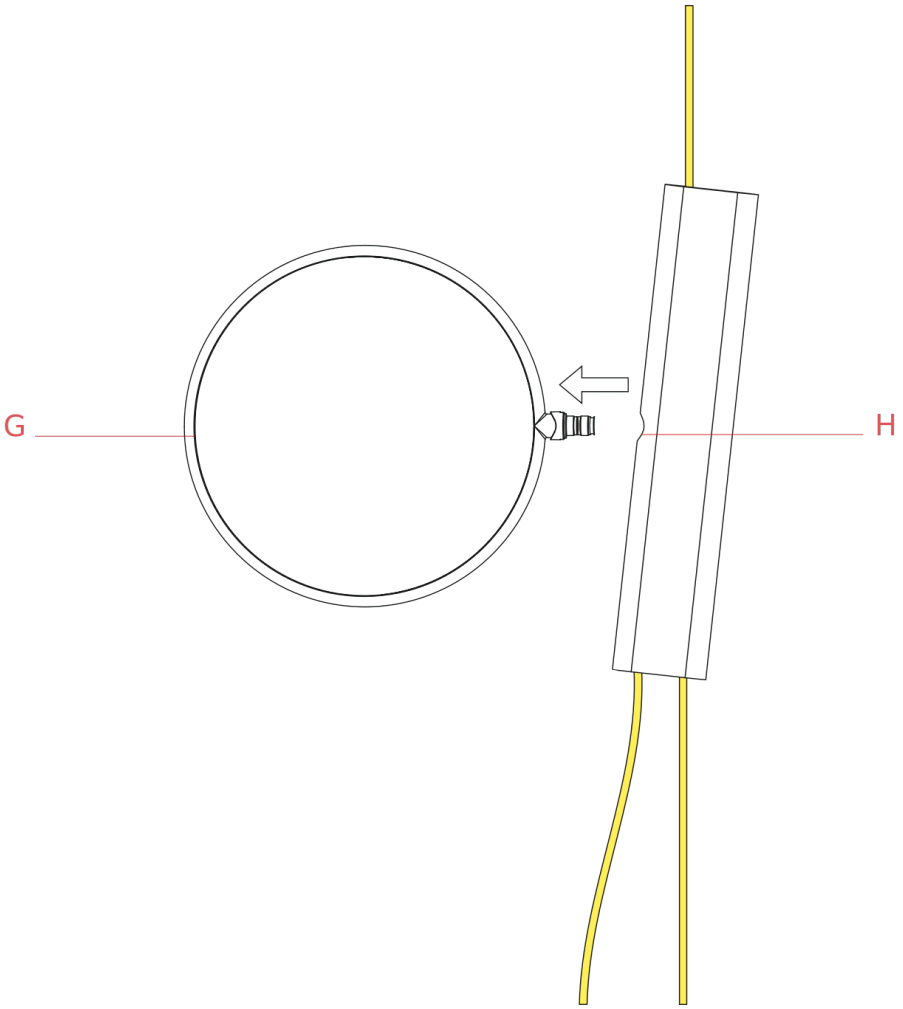


Fig.1

Remove the LED fixture head (G) from the lamp body (H).

WARNING! When installing and whenever acting on the appliance, ensure that the power supply has been switched off.
For the installation of the spare-part, it is necessary to consult a qualified electrician.

©2021 Flos - All rights reserved - www.flos.com
Flos reserves the right to introduce any changes to its own models, without prior notice.

**EN**

# RF4640400

Ok Internal lamp body assembly

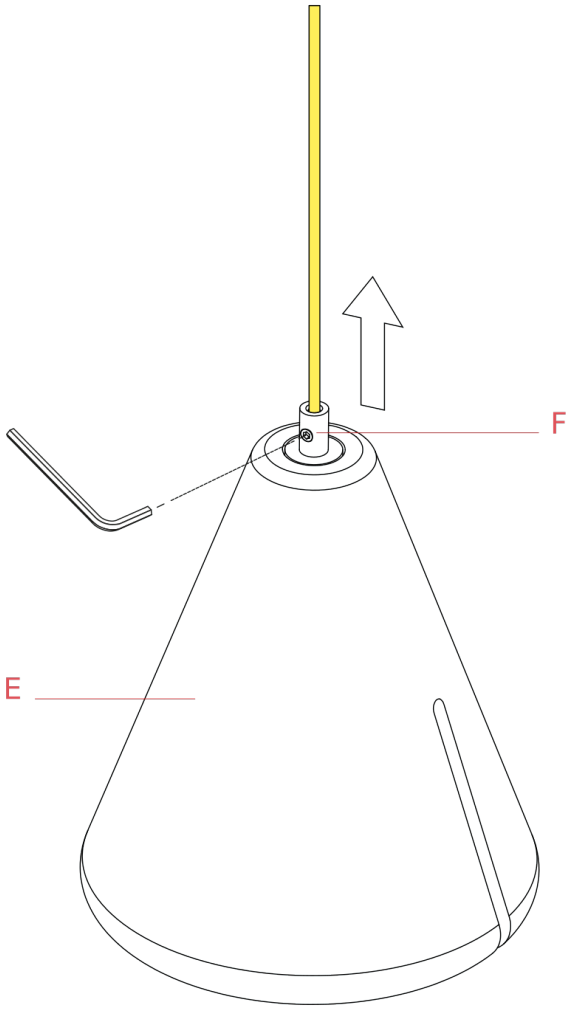


Fig.2

Free the suspension steel wires from the counterweight (E) by unfastening the headless screw (F).

WARNING! When installing and whenever acting on the appliance, ensure that the power supply has been switched off.
For the installation of the spare-part, it is necessary to consult a qualified electrician.

©2021 Flos - All rights reserved - www.flos.com
Flos reserves the right to introduce any changes to its own models, without prior notice.

**EN**

# RF4640400

Ok Internal lamp body assembly

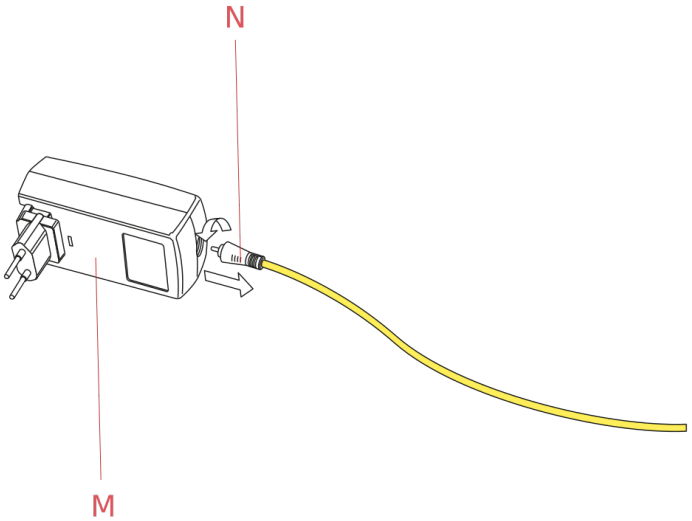


Fig.3

Unlock (rotate clockwise) and remove the plug (N) from the power unit (M).

WARNING! When installing and whenever acting on the appliance, ensure that the power supply has been switched off.
For the installation of the spare-part, it is necessary to consult a qualified electrician.

©2021 Flos - All rights reserved - www.flos.com
Flos reserves the right to introduce any changes to its own models, without prior notice.

**EN**

# RF4640400

Ok Internal lamp body assembly

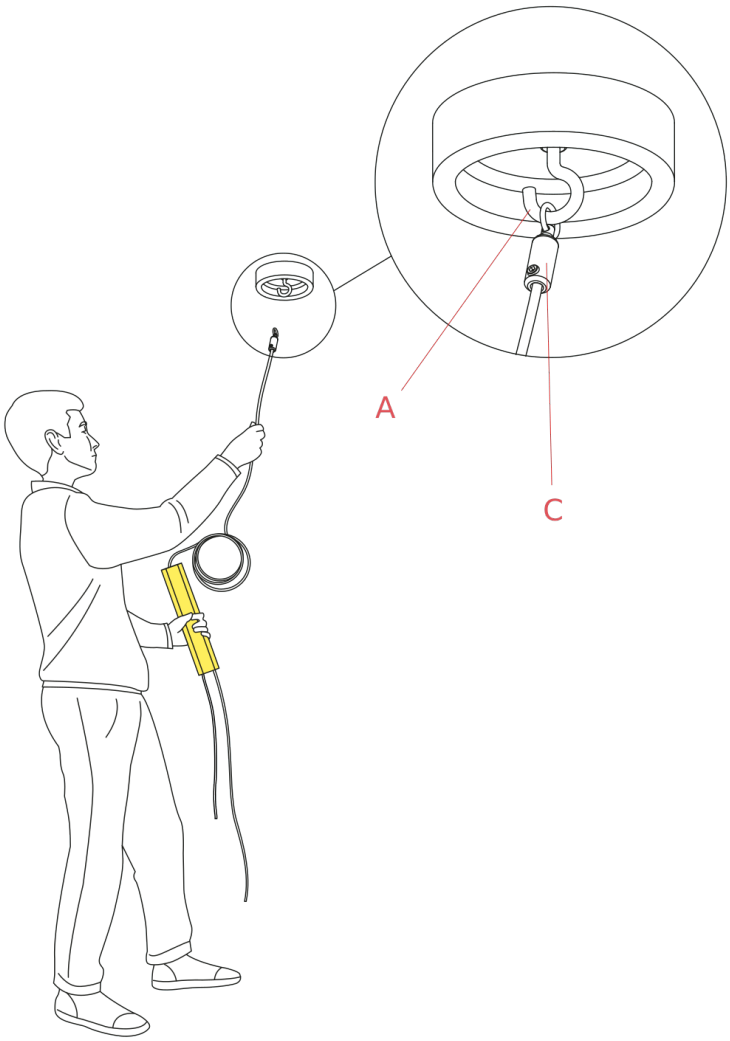


Fig.4

Unhook the steel wire end (C) from the open ring (A).

WARNING! When installing and whenever acting on the appliance, ensure that the power supply has been switched off.
For the installation of the spare-part, it is necessary to consult a qualified electrician.

©2021 Flos - All rights reserved - www.flos.com
Flos reserves the right to introduce any changes to its own models, without prior notice.

**EN**

# RF4640400

Ok Internal lamp body assembly

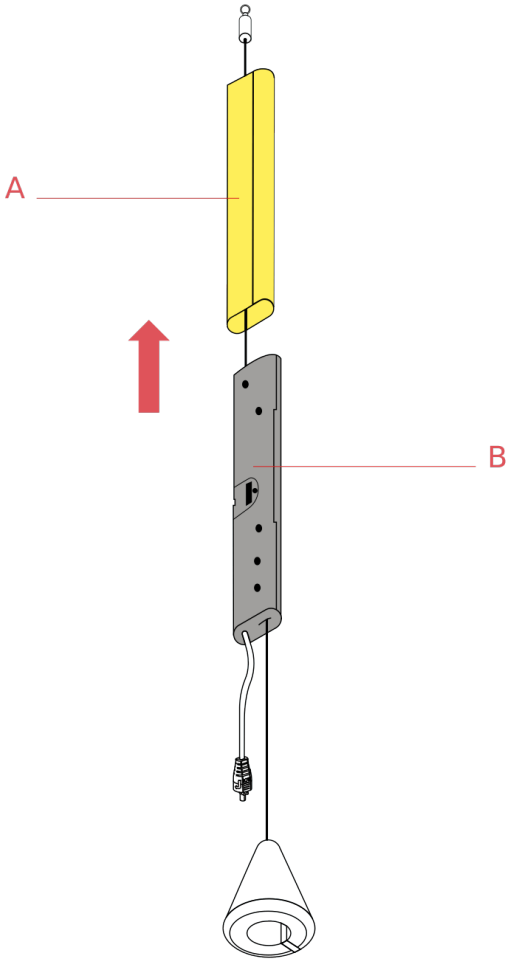


Fig.5

Unlock the damaged extrusion (A) from the central lamp body (B) and slide it off the suspension steel wire.
Assemble now the new spare-part:
Insert the extrusion (A) by sliding it through the suspension steel wire and locking it on the central body (B).
Hook the steel wire end (C) to the open ring (A).(Fig.2 page 2)

WARNING! When installing and whenever acting on the appliance, ensure that the power supply has been switched off.
For the installation of the spare-part, it is necessary to consult a qualified electrician.

©2021 Flos - All rights reserved - www.flos.com
Flos reserves the right to introduce any changes to its own models, without prior notice.

**EN**

# RF4640400

Ok Internal lamp body assembly

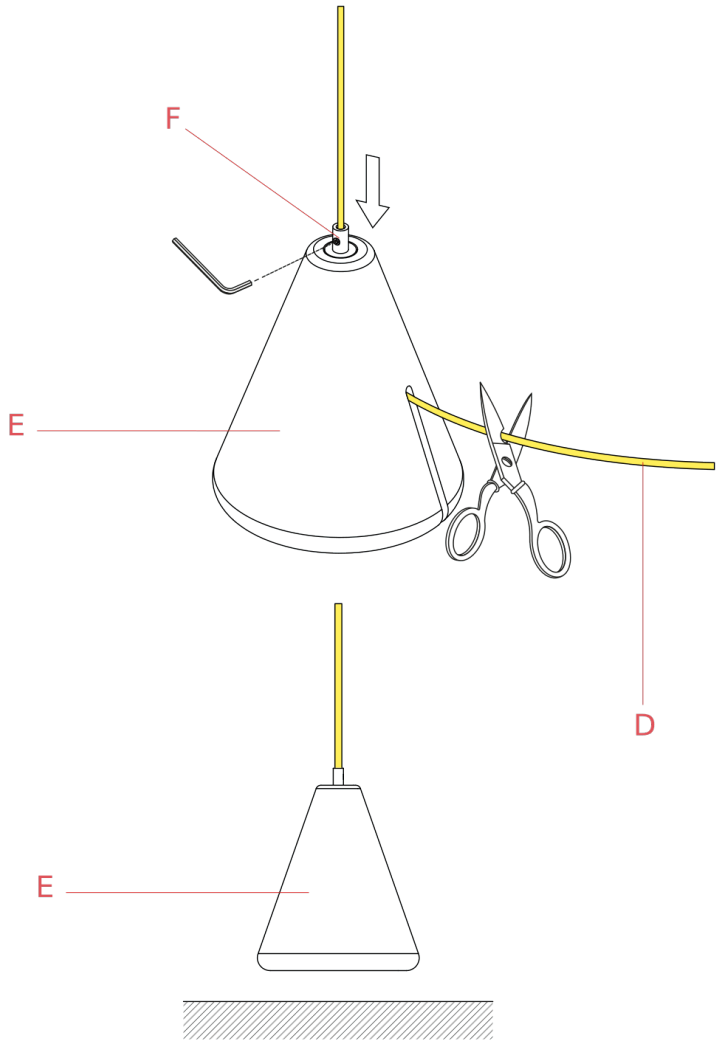


Fig.6

Pass the steel wire (D) through the counterweight (E) and run it through until the counterweight remains slightly suspended above the floor, then lock the wire by tightening the screw (F) and cut off the excess wire.
WARNING! Lifting up the counterweight will cause mechanical tension loss of the suspension wire, causing the lamp fixture to fall down.

WARNING! When installing and whenever acting on the appliance, ensure that the power supply has been switched off.
For the installation of the spare-part, it is necessary to consult a qualified electrician.

©2021 Flos - All rights reserved - www.flos.com
Flos reserves the right to introduce any changes to its own models, without prior notice.

**EN**

# RF4640400

Ok Internal lamp body assembly

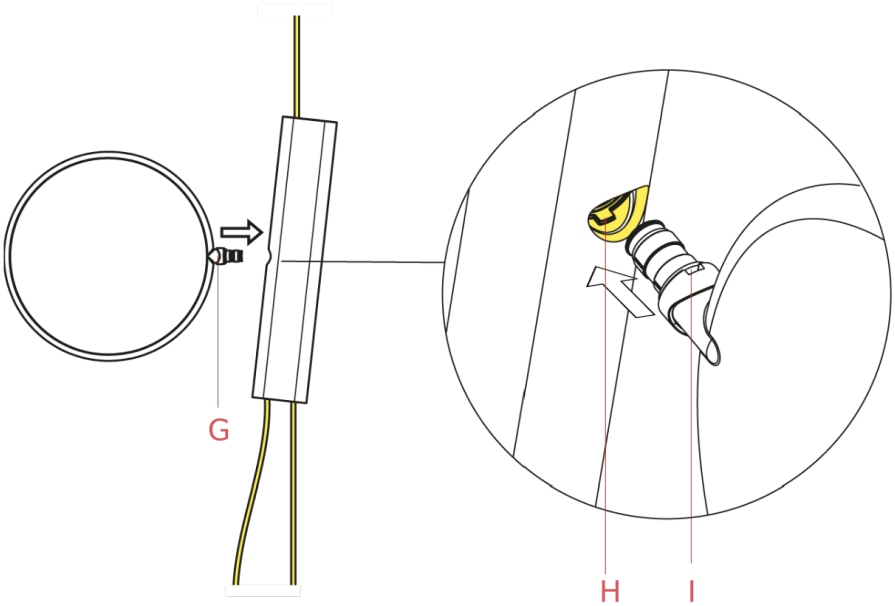


Fig.7

Assemble the LED fixture head, inserting the pin (G) in the hole (H) of the lamp body, ensuring that the guide (I) are correctly oriented (guide "I" needs to be turned upwards).
Connect the plug (N) to the power unit locking it in by rotating it 90° clockwise.(Fig.3 page 3)

WARNING! When installing and whenever acting on the appliance, ensure that the power supply has been switched off.
For the installation of the spare-part, it is necessary to consult a qualified electrician.

©2021 Flos - All rights reserved - www.flos.com
Flos reserves the right to introduce any changes to its own models, without prior notice.