EN

F1532030

Captain Flint Black marble base

WARNING! When installing and whenever acting on the appliance, ensure that the power supply has been switched off.
For the installation of the spare-part, it is necessary to consult a qualified electrician.

©2021 Flos - All rights reserved - www.flos.com
Flos reserves the right to introduce any changes to its own models, without prior notice.

EN

F1532030

Captain Flint Black marble base

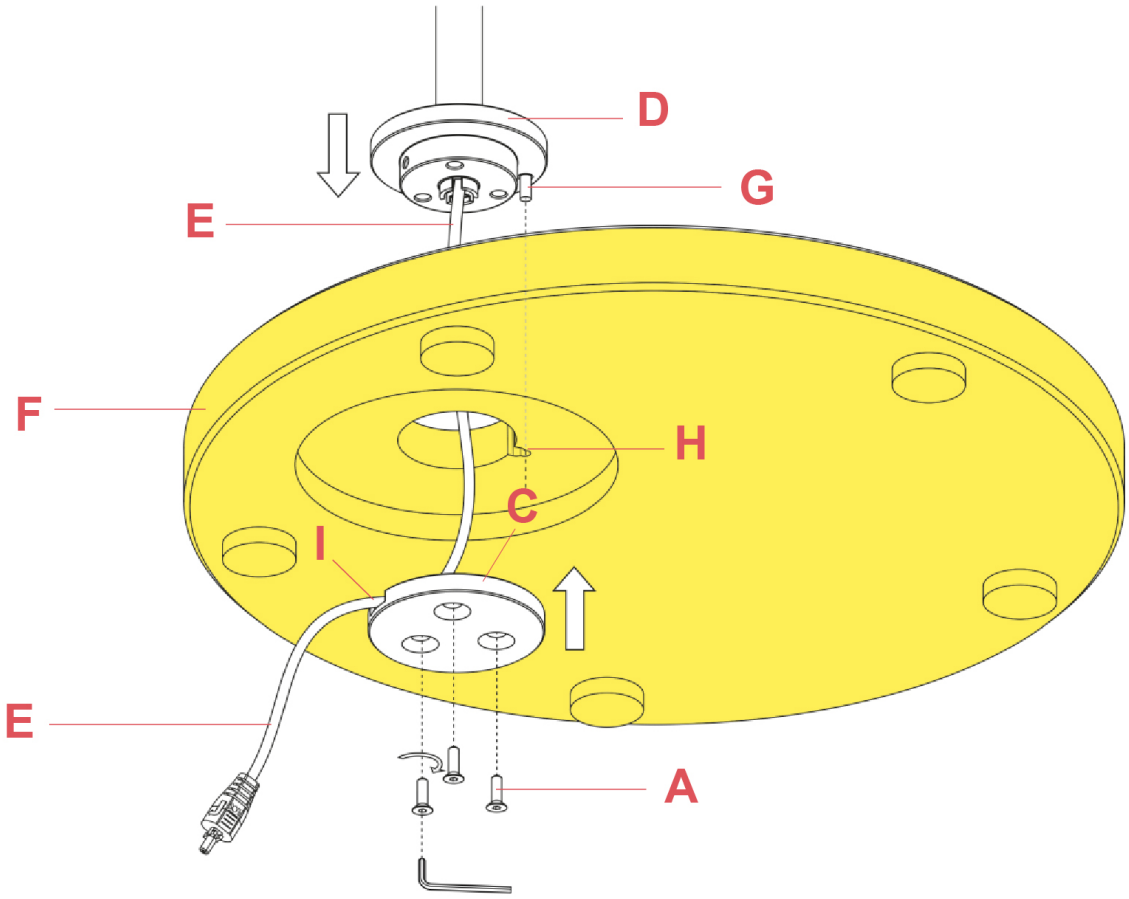

Fig.1

Insert the cable (E) into the hole of the base (F) and place the upper flange (D) inserting the plug into the slot (H). Fix the lower flange (C) through the screws (A) paying attention to insert the cable (E) into the split (I) which must be placed oppose the plug (G).

WARNING! When installing and whenever acting on the appliance, ensure that the power supply has been switched off.
For the installation of the spare-part, it is necessary to consult a qualified electrician.

©2021 Flos - All rights reserved - www.flos.com
Flos reserves the right to introduce any changes to its own models, without prior notice.