EN

RF6630230

ASS.GAMBA FISSA SUPERLOON NRO EMC



WARNING! When installing and whenever acting on the appliance, ensure that the power supply has been switched off.
For the installation of the spare-part, it is necessary to consult a qualified electrician.

©2021 Flos - All rights reserved - www.flos.com
Flos reserves the right to introduce any changes to its own models, without prior notice.

EN

RF6630230

ASS.GAMBA FISSA SUPERLOON NRO EMC

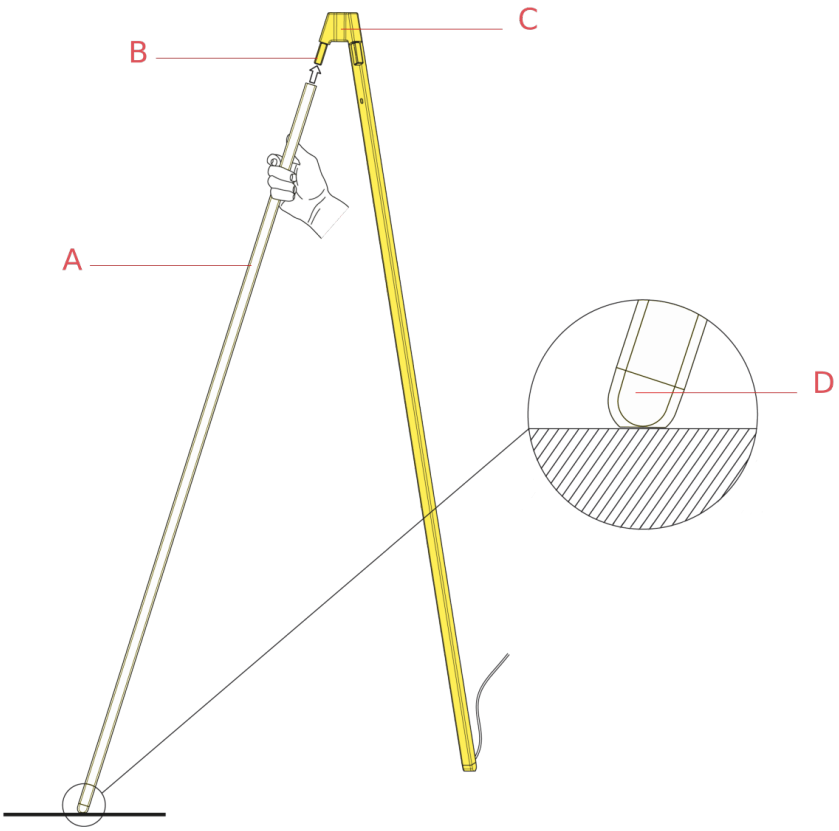

Fig.1

Insert the two legs (A) in the pins (B) of the base element (C)
paying attention to the correct orientation of the feet (D).

WARNING! When installing and whenever acting on the appliance, ensure that the power supply has been switched off.
For the installation of the spare-part, it is necessary to consult a qualified electrician.

©2021 Flos - All rights reserved - www.flos.com
Flos reserves the right to introduce any changes to its own models, without prior notice.

EN

RF6630230

ASS.GAMBA FISSA SUPERLOON NRO EMC

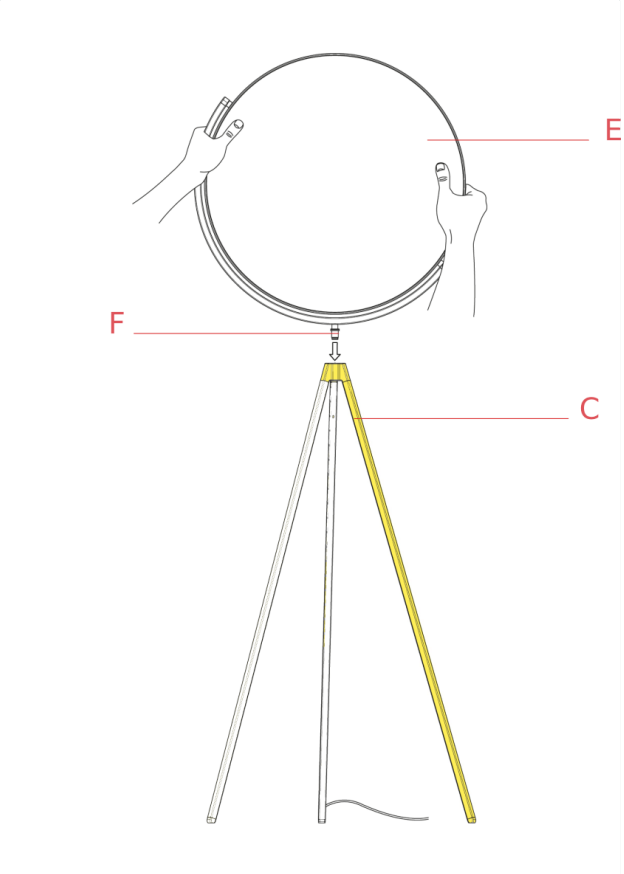

Fig.2

Mount the diffuser head (E) inserting the pin (F) in the hole of the base element (C).

WARNING! When installing and whenever acting on the appliance, ensure that the power supply has been switched off.
For the installation of the spare-part, it is necessary to consult a qualified electrician.

©2021 Flos - All rights reserved - www.flos.com
Flos reserves the right to introduce any changes to its own models, without prior notice.

EN

RF6630230

ASS.GAMBA FISSA SUPERLOON NRO EMC

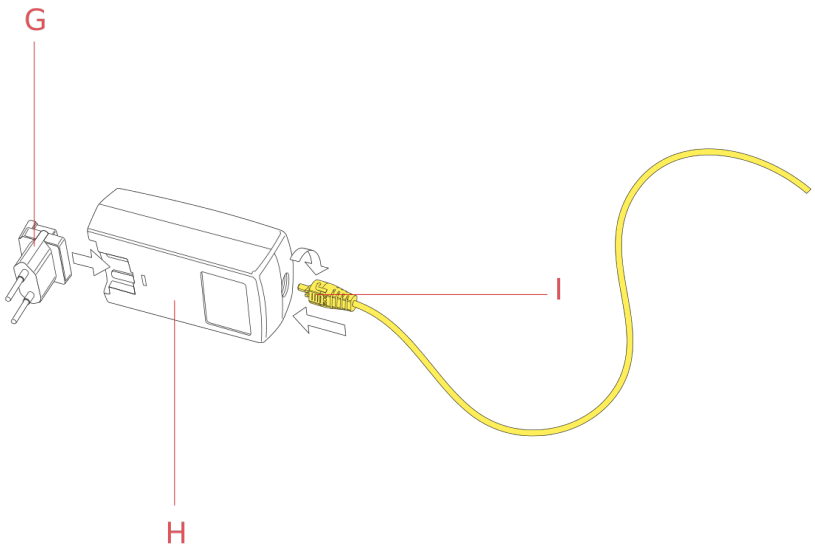

Fig.3

Connect the plug (I) to the feeder unit locking in by rotating it 90° clockwise.

WARNING! When installing and whenever acting on the appliance, ensure that the power supply has been switched off.
For the installation of the spare-part, it is necessary to consult a qualified electrician.

©2021 Flos - All rights reserved - www.flos.com
Flos reserves the right to introduce any changes to its own models, without prior notice.

EN

RF6630230

ASS.GAMBA FISSA SUPERLOON NRO EMC

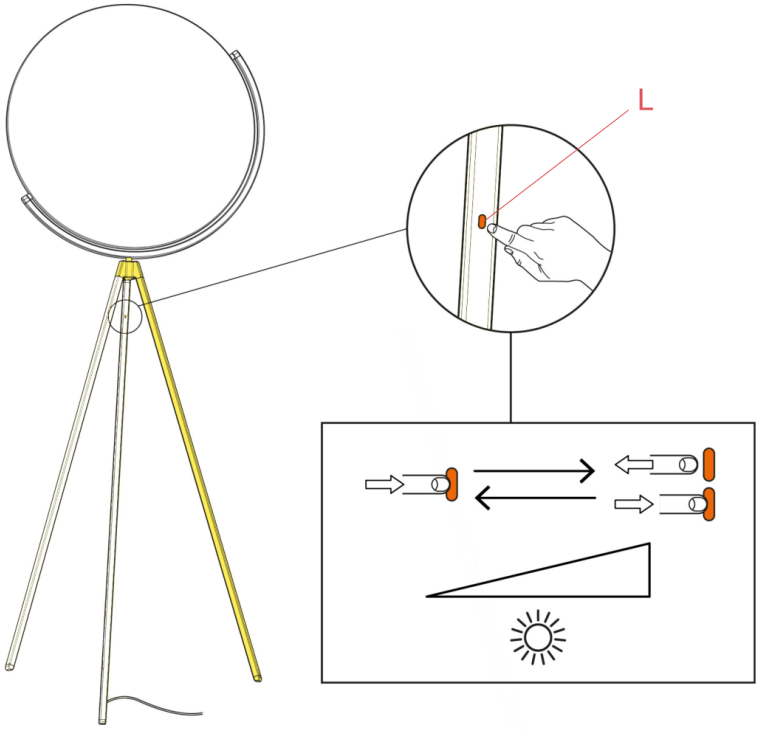

Fig.4

To switch on/off the device lightly touch the sensor (L); prolonged contact with the sensor causes the progressive increase of the light intensity from 10% up to 100% and at the same time an increase of the colour temperature from 2200K to 2800K; when the desired intensity is reached, remove finger from the button. A successive prolonged contact with the sensor will cause the progressive decrease. NOTE: Thanks to the card's memory, when the device is turned on from a wall switch, it comes on again at the same brightness level it was at when it was turned off. The brightness level (and corresponding colour temperature) is automatically activated by the LED card after at least 15 seconds' fixed operation (without making adjustments).

WARNING! When installing and whenever acting on the appliance, ensure that the power supply has been switched off.
For the installation of the spare-part, it is necessary to consult a qualified electrician.

©2021 Flos - All rights reserved - www.flos.com
Flos reserves the right to introduce any changes to its own models, without prior notice.